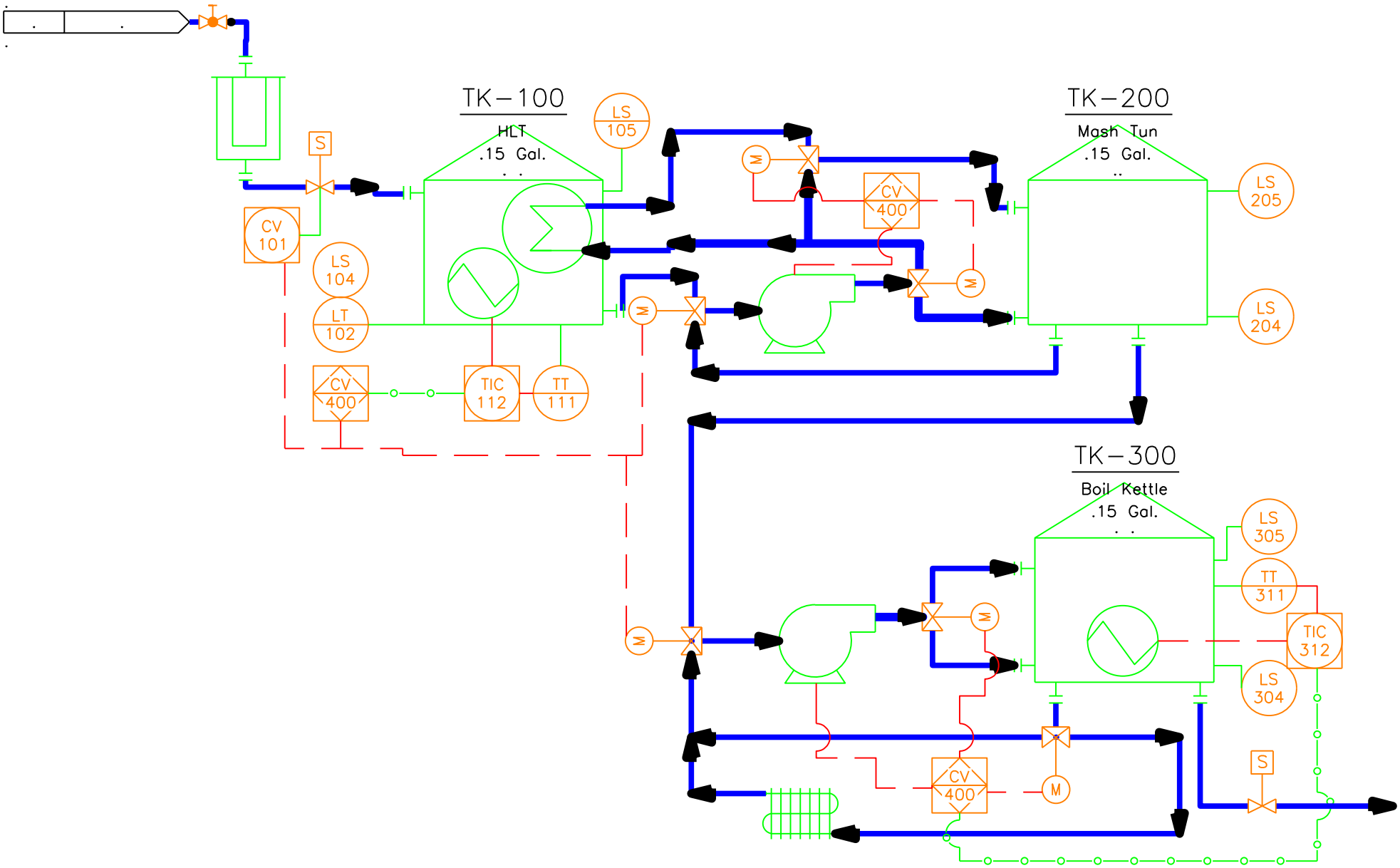
TK-100
HLT
.15 Gal.
TK-200
Mash Tun
.15 Gal.
TK-300
Boil Kettle
.15 Gal.
S
CV 101
LS 104
LT 102
CV 400
TIC 112
TT 111
LS 105
M
CV 400
LS 205
LS 204
LS 305
TT 311
TIC 312
LS 304
CV 400
M
S